Missile Turret

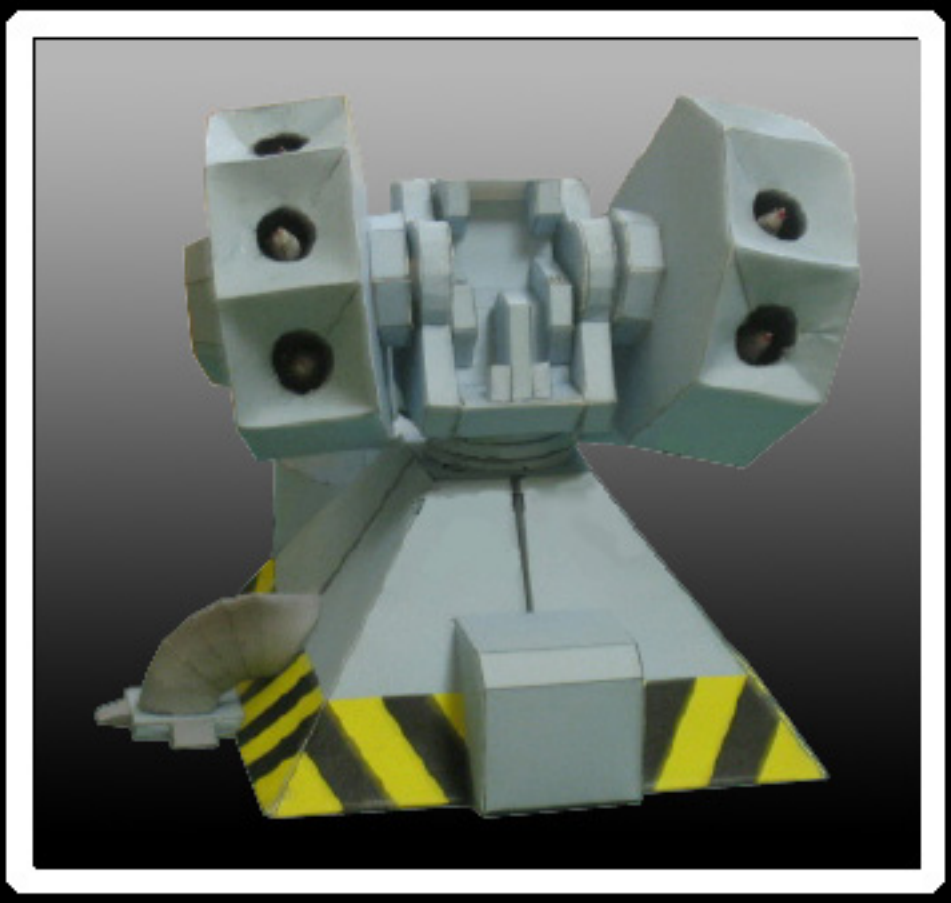

Structured by [GaiRyuKi]

Cover Picture: Modeled by [슷하is]

A

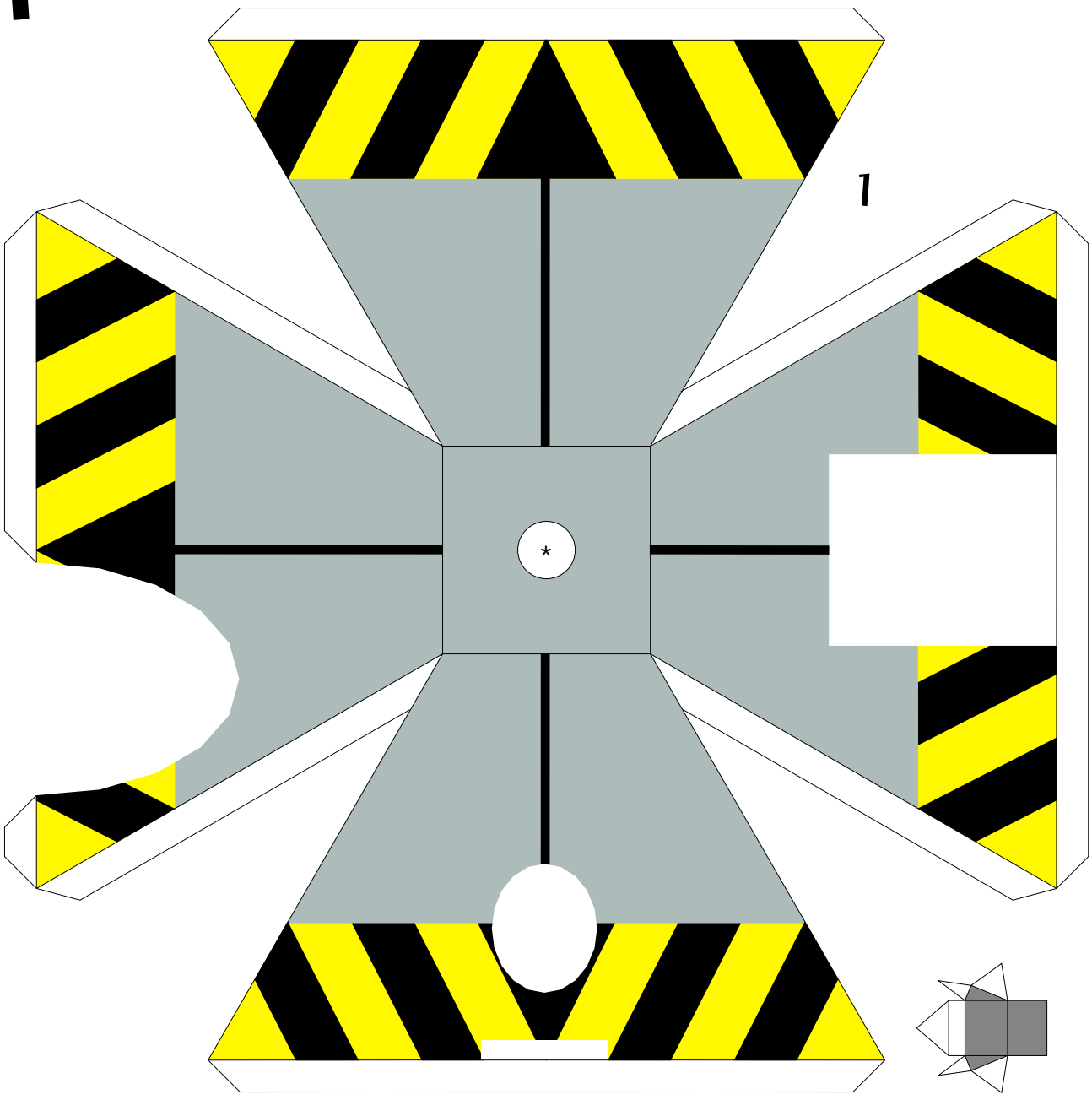

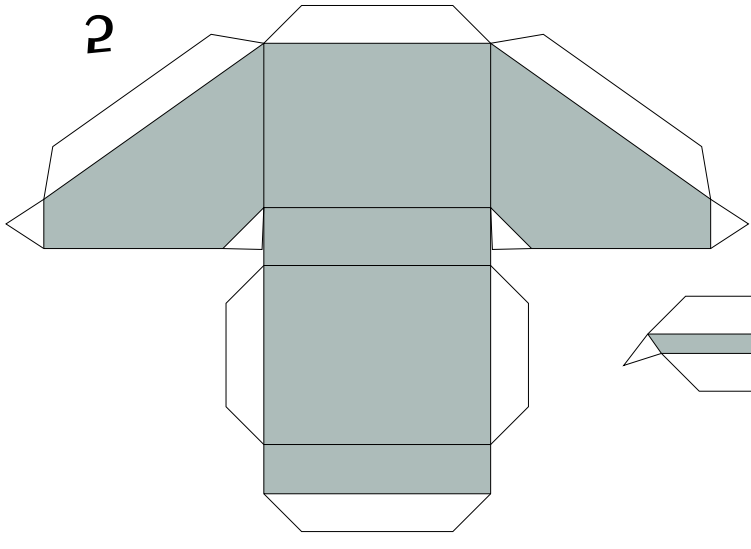

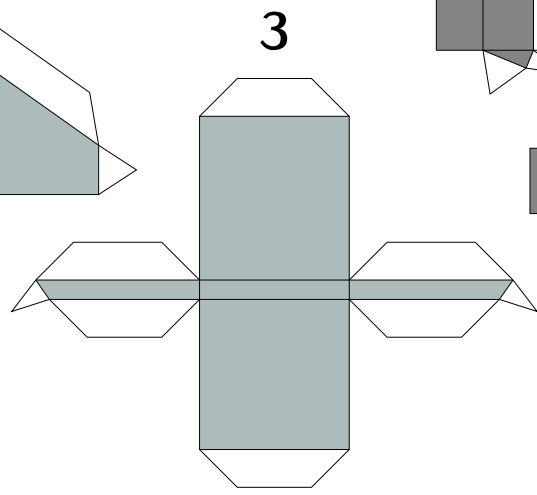

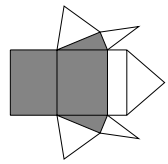

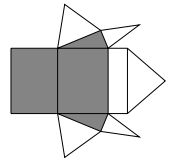

B

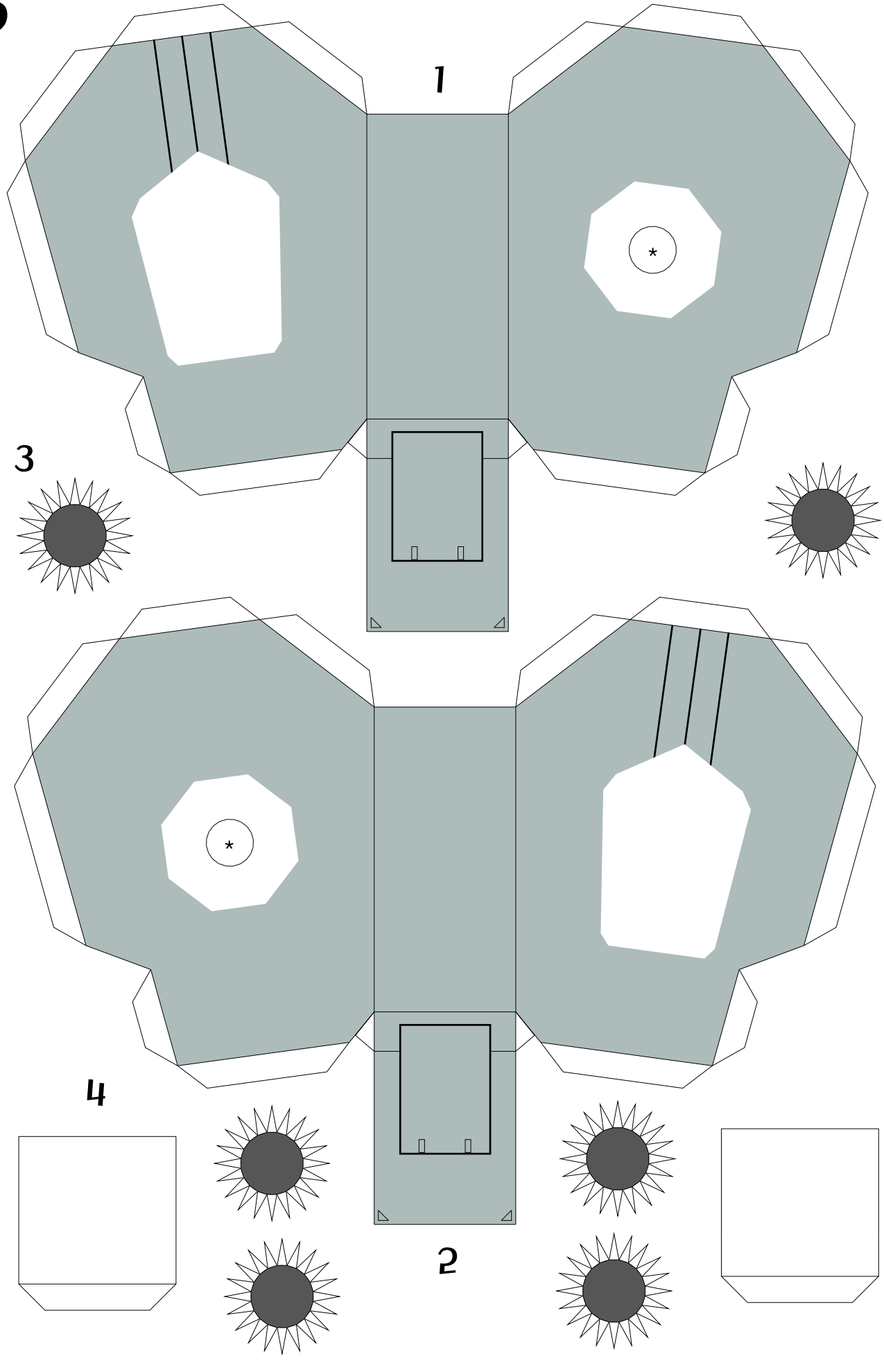

C

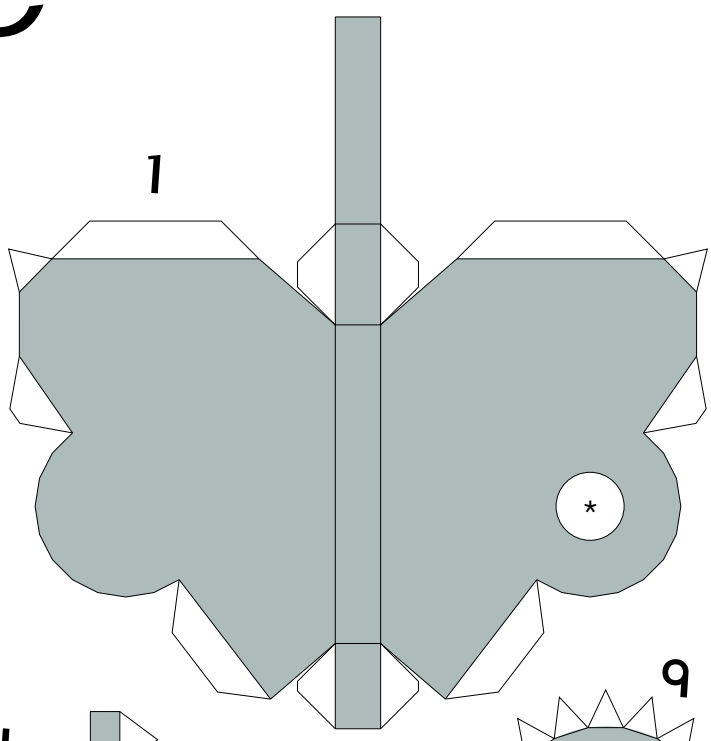

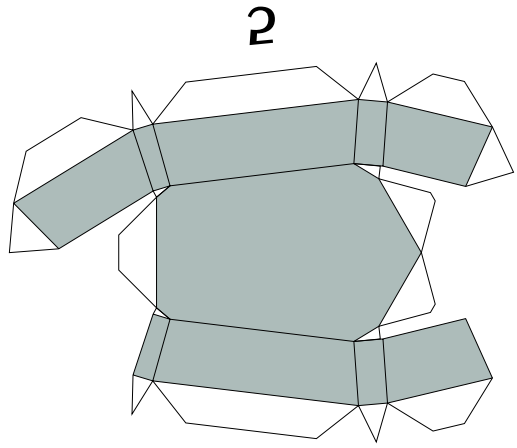

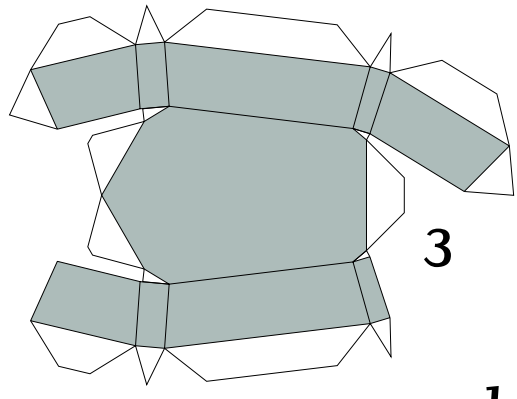

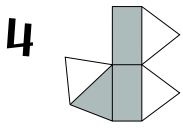

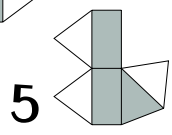

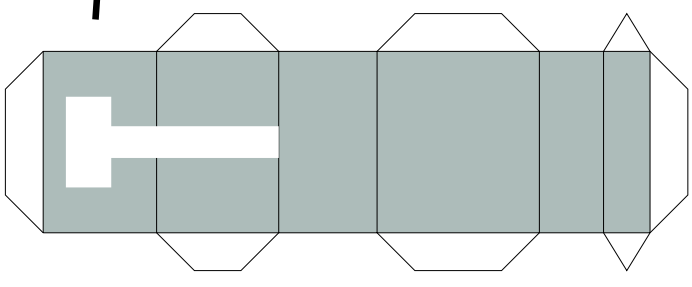

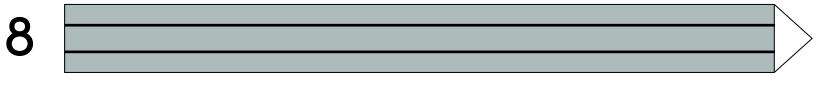

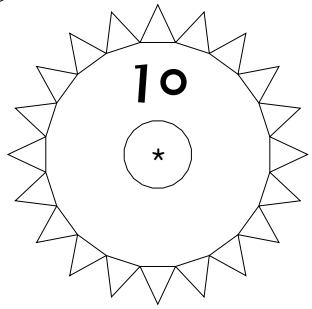

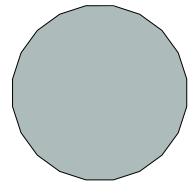

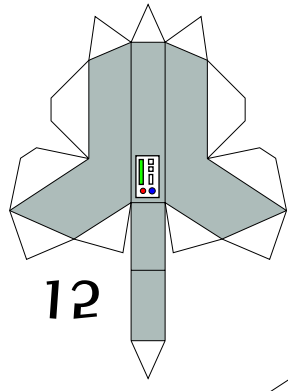

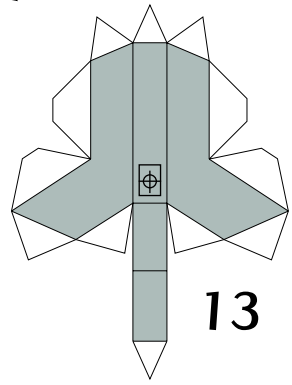

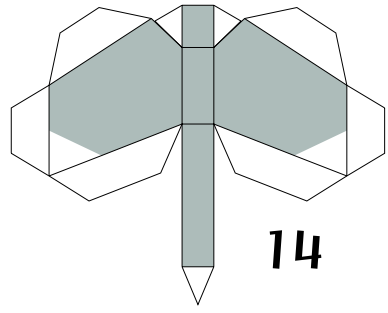

D

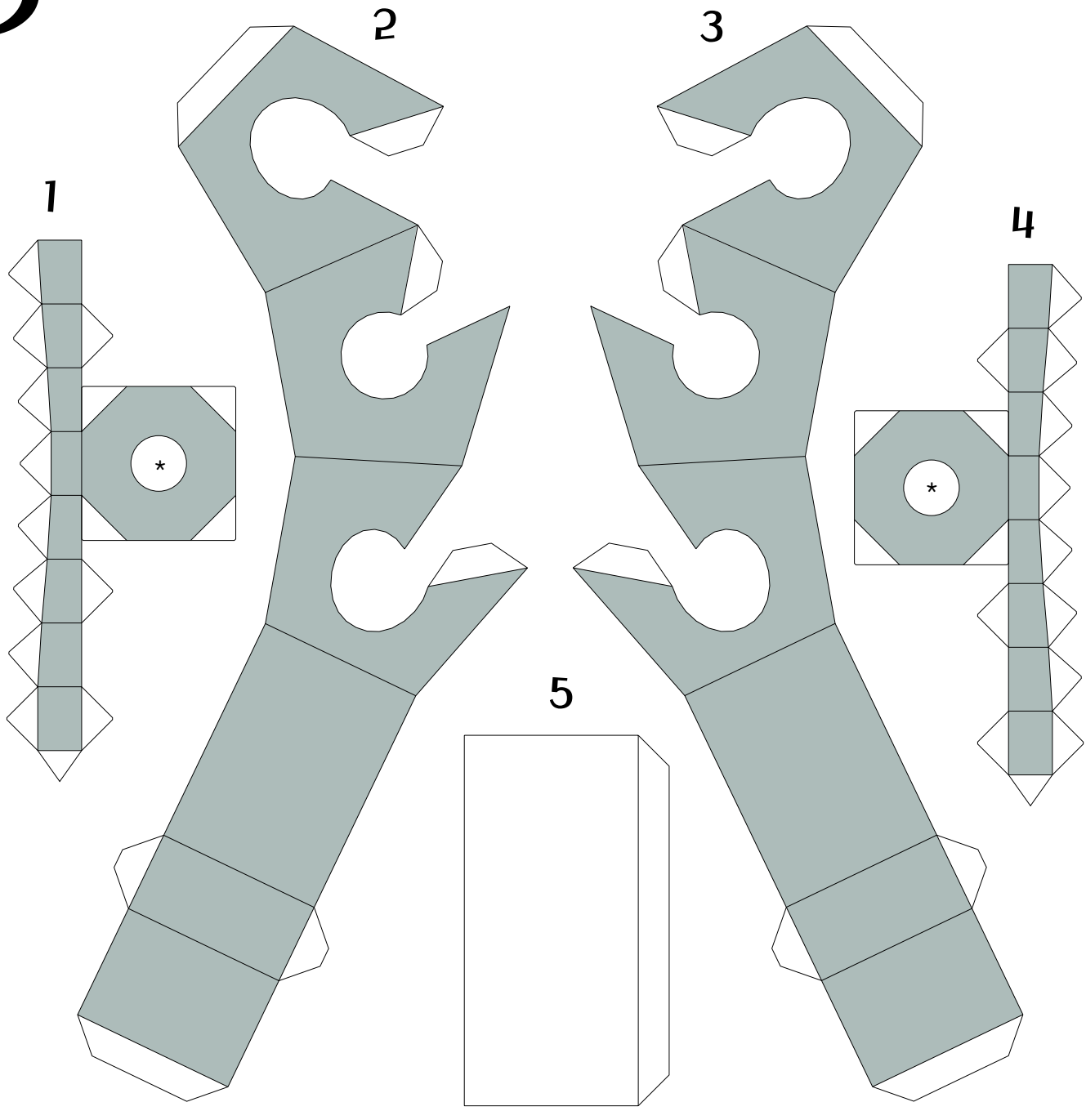

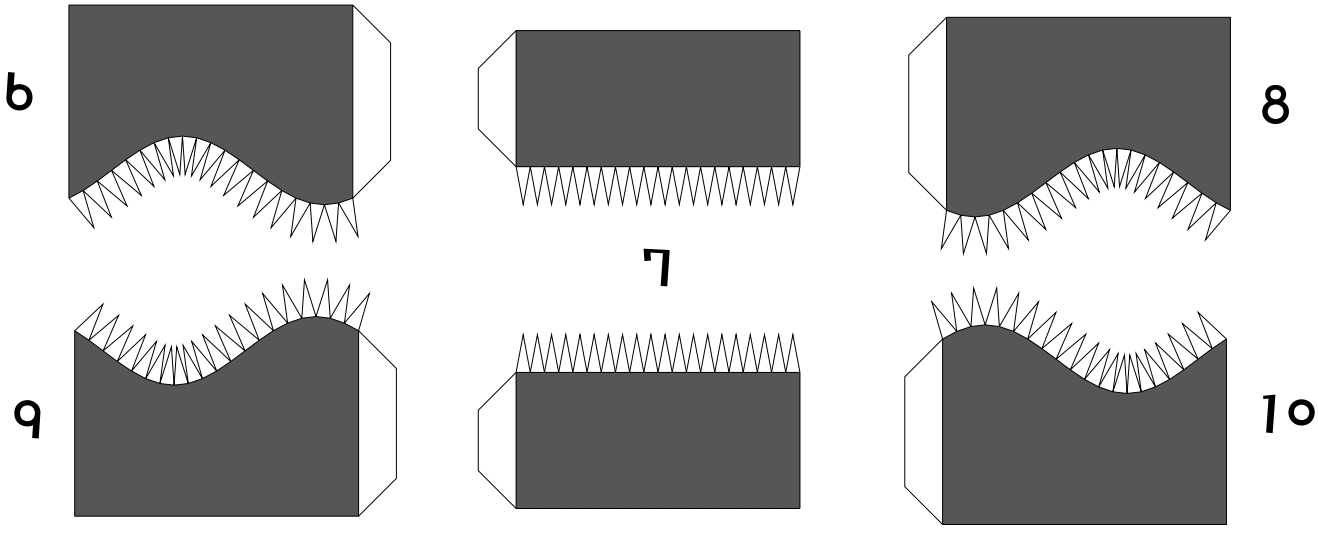

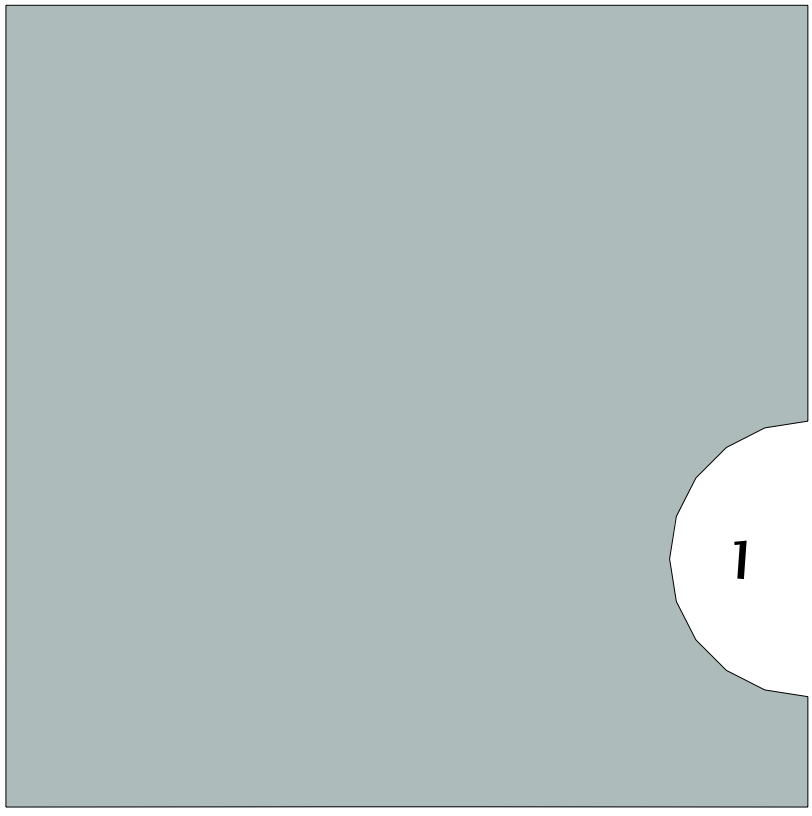

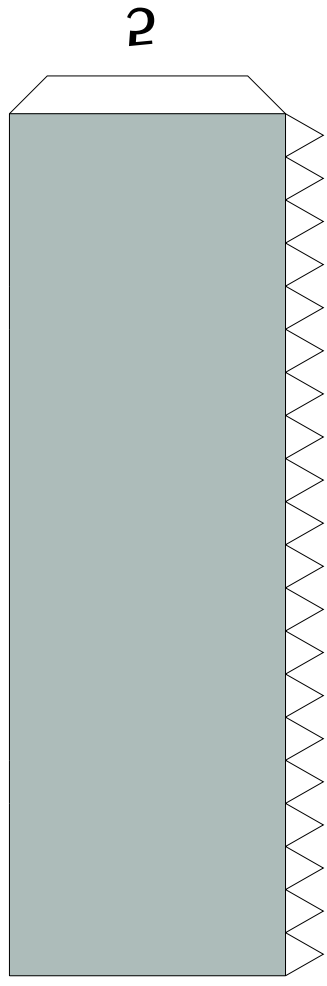

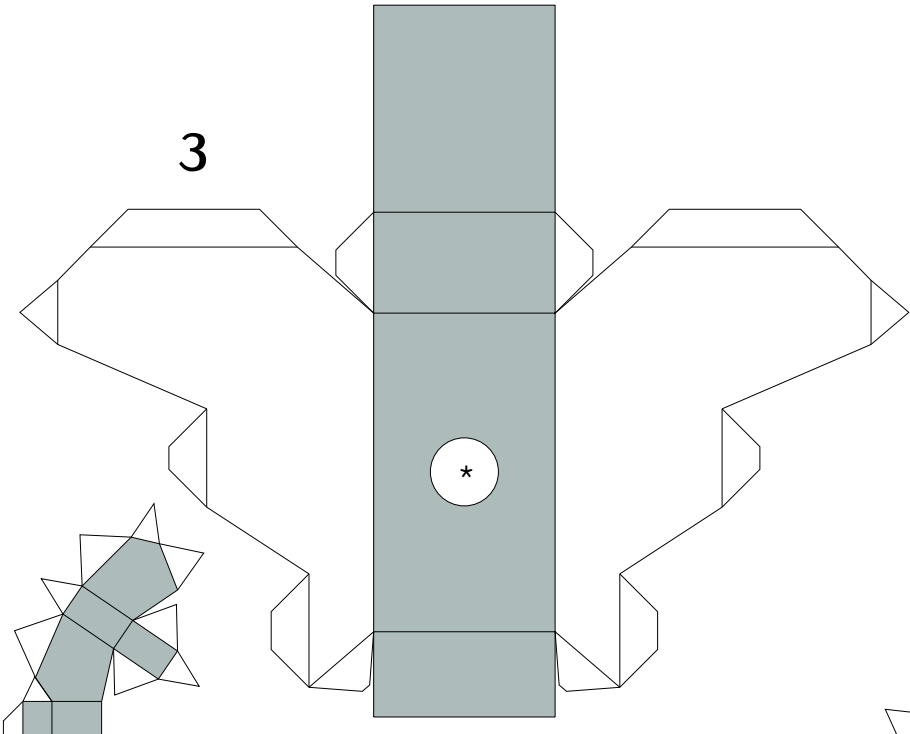

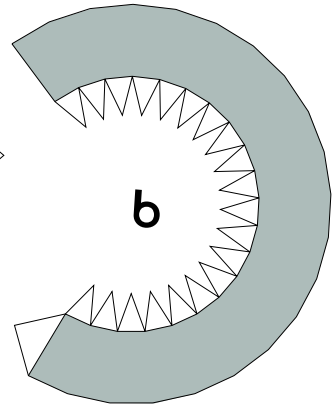

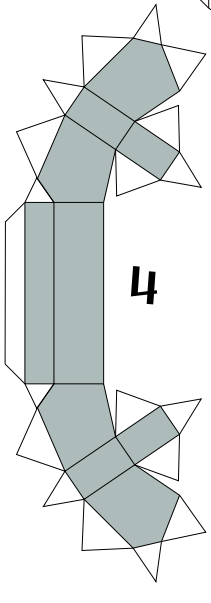

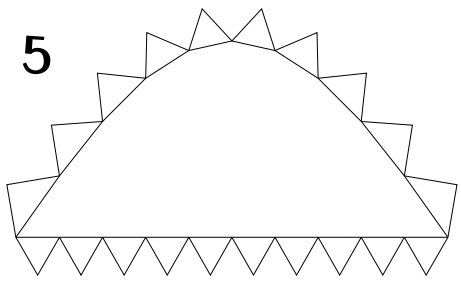

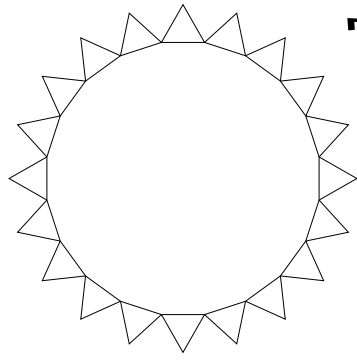

E

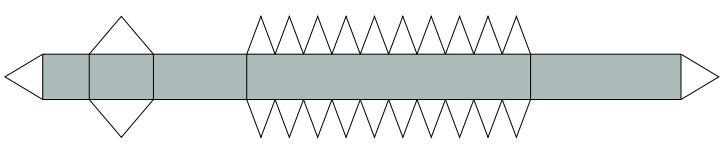

1

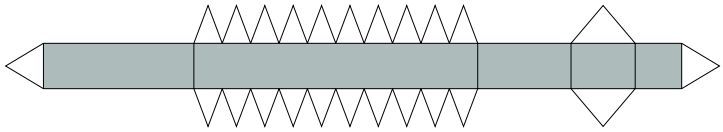

2

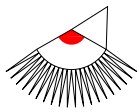

3

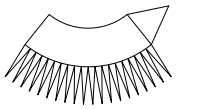

4



5

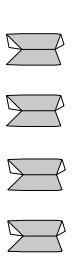

6

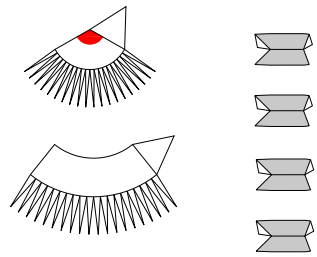



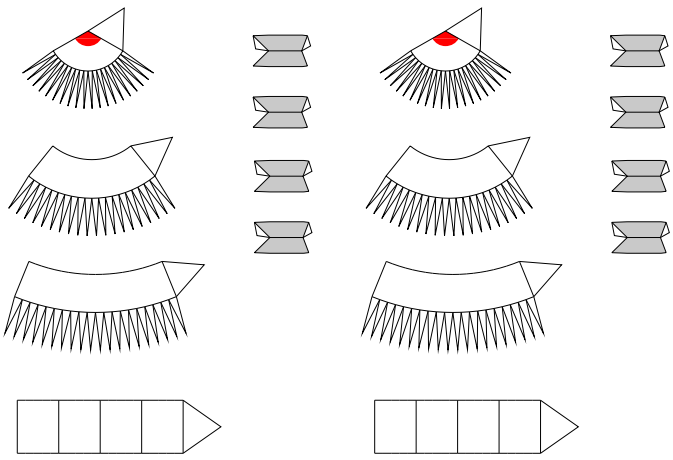

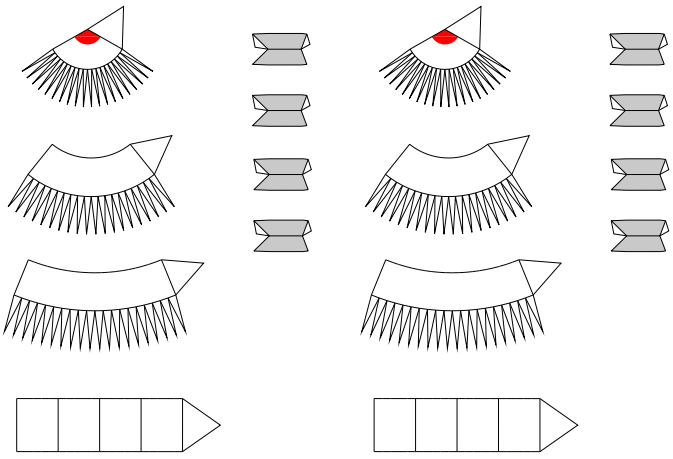

7

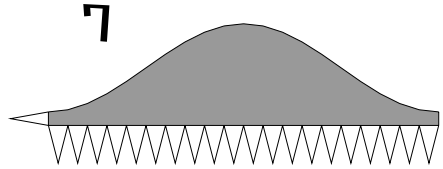

8

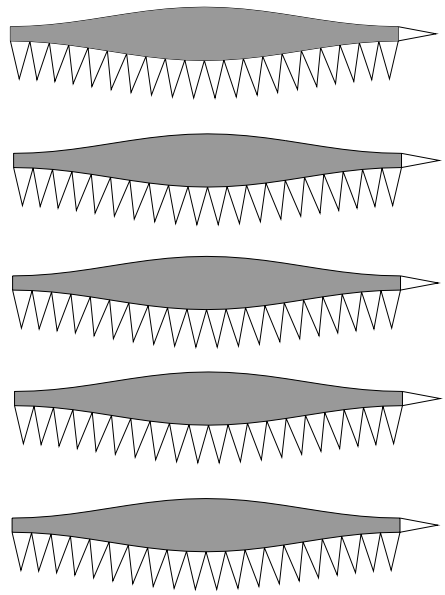

F